Transport Layer Protocols II

Course Code: CSC 3116 Course Title: Computer Networks

Dept. of Computer Science
Faculty of Science and Technology

Lecturer No:	7	**Week No:**		**Semester:**	Summer 22-23
Lecturer:	*Sharifa Rania Mahmud; rania@aiub.edu*				

Lecture Outline

1. Congestion in networks
2. Congestion control
   - TCP Reno
3. Error control principle
   - Sliding window technique

Congestion in networks

- **Congestion**

Congestion is a situation in a network in which the load on the network, the number of packets sent to the network, is greater than the capacity of the network, the number of packets a network can handle.

- **Congestion control**

Congestion control refers to the mechanisms and techniques to control the congestion and keep the load below the capacity [1].

Congestion in networks…

- Congestion in a network or internetwork occurs because routers and switches have queues-buffers that hold the packets before and after processing.
- A router, for example, has an input queue and an output queue for each interface.
- When a packet arrives at the incoming interface, it undergoes three steps before departing:
  1. The packet is put at the end of the input queue while waiting to be checked.
  2. The processing module of the router removes the packet from the input queue once it reaches the front of the queue and uses its routing table and the destination address to find the route.
  3. The packet is put in the appropriate output queue and waits its turn to be sent.

Congestion in networks…

- **Two possible scenarios in a router:**
  1. Packet arrival rate > packet processing rate,
     the input queues become longer and longer.
  2. Packet departure rate < Packet processing rate,
     the output queues become longer and longer

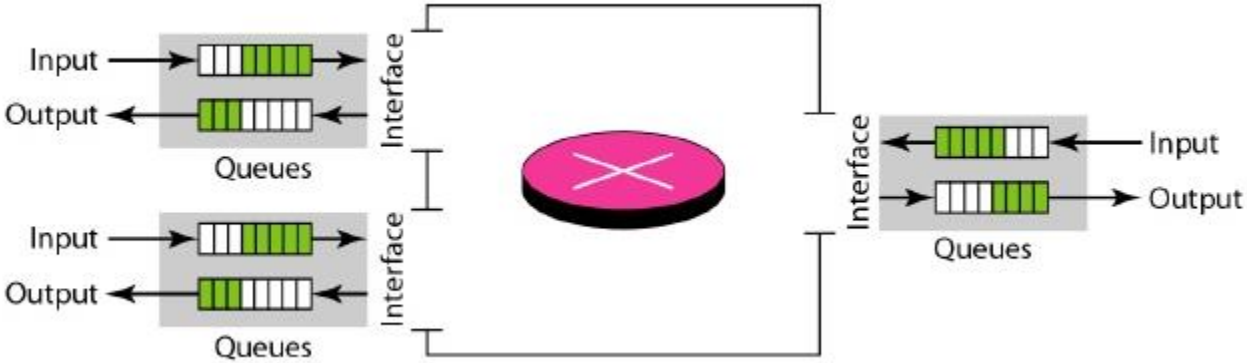

Congestion Control

Terminology

- **Congestion Window**
  - The number of bytes the sender may have in the network at any time [2]
  - LastByteSent – LastByteAcked <= cwnd
- **Sending Rate**
  - The congestion window size divided by the round-trip time (RTT[1]) of the connection [2].

❖ *By adjusting the value of cwnd, the sender can therefore adjust the rate at which it sends data into its connection [3].*

1 The time from when a segment is sent until it is acknowledged.

Congestion Control

Terminology

- Loss Event
  - Timeout
    - Sender does not receive any acknowledgement within a predefined interval
  - 3 duplicate Acknowledgement (3 duplicate ACK)
    - Reception of the same ACK four times.
    - Indicates that the channel is not congested that much as the receiver is still receiving segments.
    - Indicates that the segment 3 is lost as it receives the dupli ACK 3
    - Receiver is receiving segment out of order.

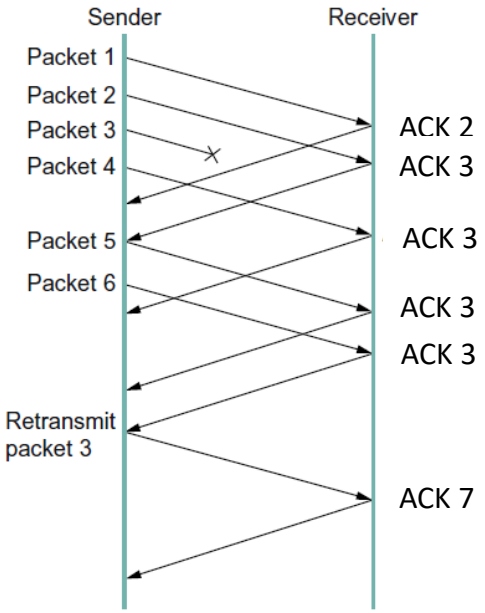

Congestion Control

TCP Reno

- **Steps of congestion window control**
  - Slow Start
  - Congestion Avoidance

Congestion Control

TCP Reno

❖**Slow Start**

Follows a greedy approach.

Starts sending data of size equals maximum sized segment (MSS).

If it receives an ACK for the previous transmission by next RTT → it sends 2 MSS.

After next RTT, if it receives two ACKs → it sends 2+2=4 MSS in next round.

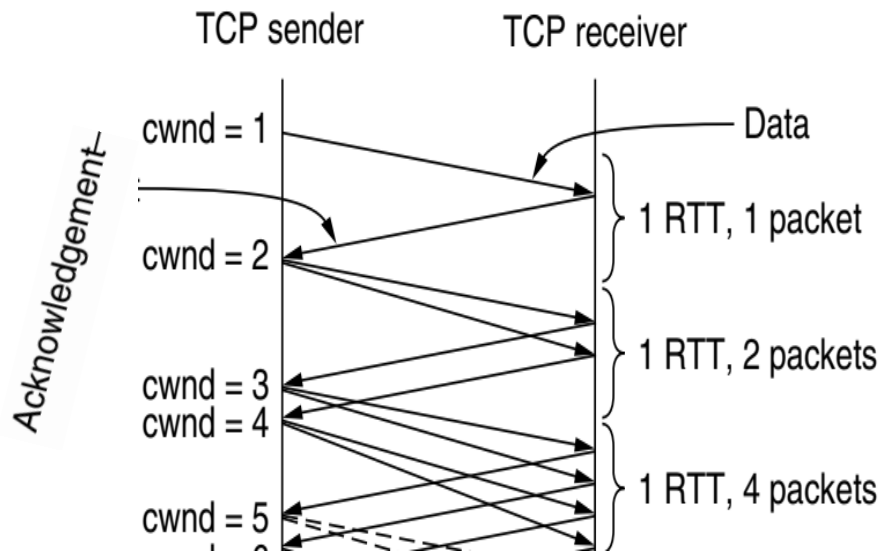

Fig. 1 Slow start from an initial congestion window of one segment [2].

Congestion Control

TCP Reno

❖**Slow Start (cont.)**

That is, in each round, N+M MSS in a round if it sends N MSS in the last transmission round and receives M ACK before the current round.

If it receives ACK for all the N MSS (previously sent), it sends N+N MSS this round.

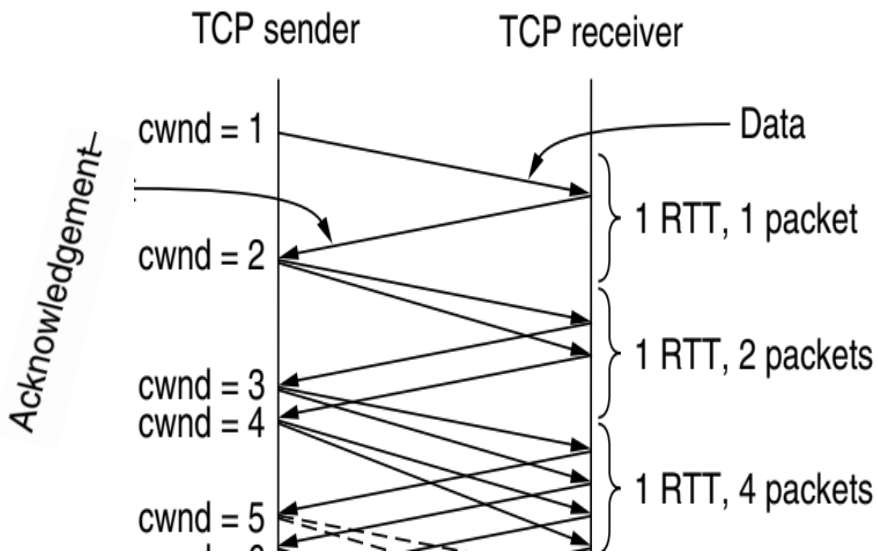

Fig. 1 Slow start from an initial congestion window of one segment [2].

Congestion Control

TCP Reno

❖**Congestion Avoidance**

How long does cwnd continue to be increased exponentially?

$if\ cwnd \geq threshold$

Increase cwnd by1 per transmission round

That is, increase cwnd linearly[1]

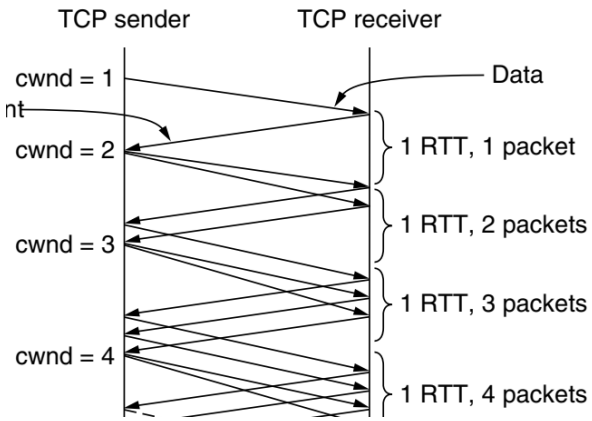

Fig. 2 Linear increase of cwnd

1. Usually timeout and 3 duplicate ACK do not happen in slow start

Congestion Control

TCP Reno

How long does cwnd continue to be increased linearly?

- Until one of two incidents happen
  - Timeout
  - 3 duplicate ACK

- **Timeout**

$$Threshold = \frac{cwnd}{2}$$

$$cwnd = 1\ MSS$$

Start slow start

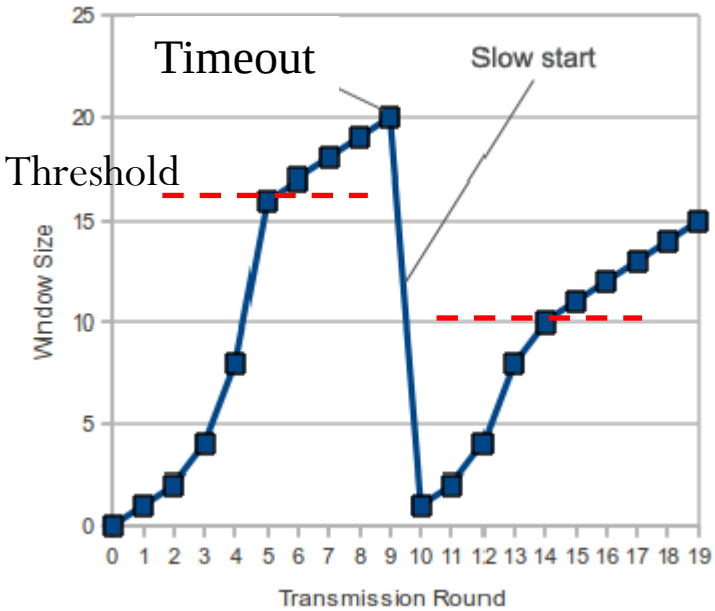

Fig. 3 Timeout

Congestion Control

TCP Reno

- **3 duplicate ACK**

$$Threshold = \frac{cwnd}{2}$$

$$cwnd = Threshold$$

Start congestion avoidance

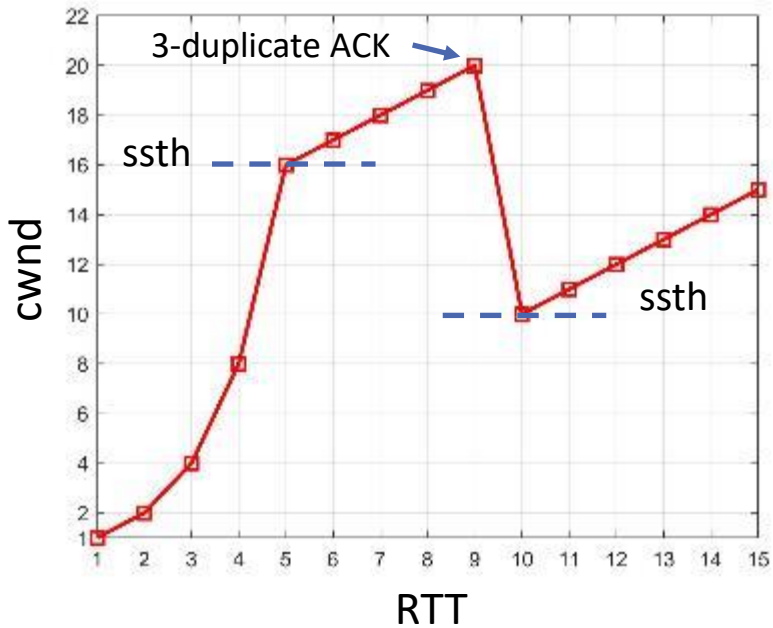

Fig. 4 3 duplicate ACK

Congestion Control

TCP Reno

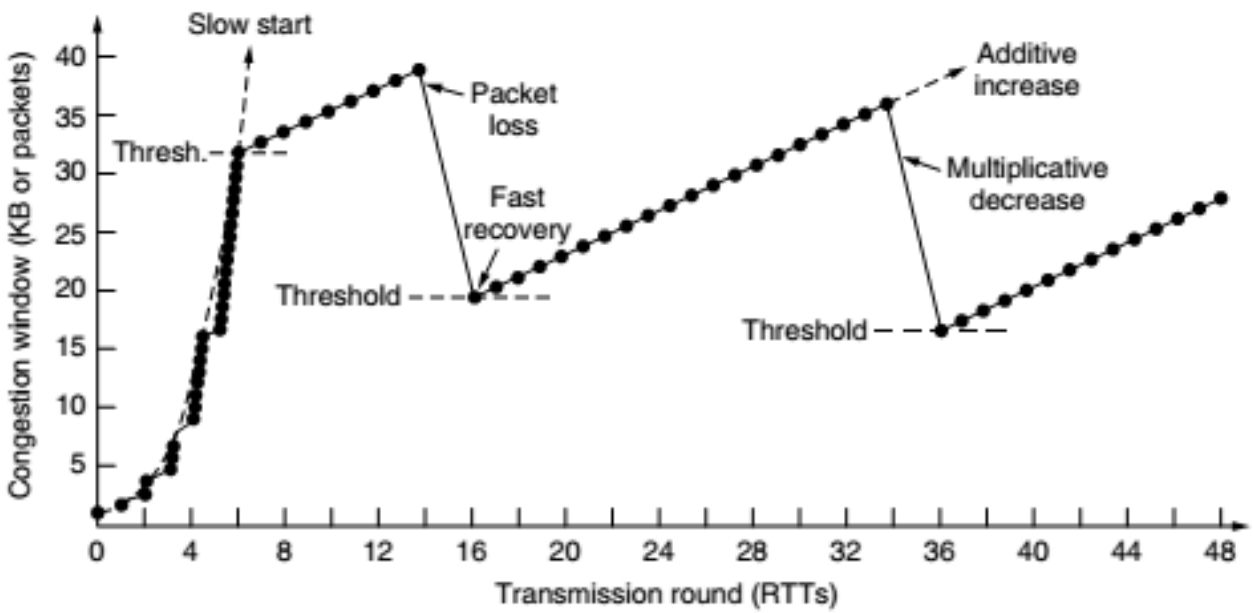

Fig. 5 TCP reno example

Congestion Control

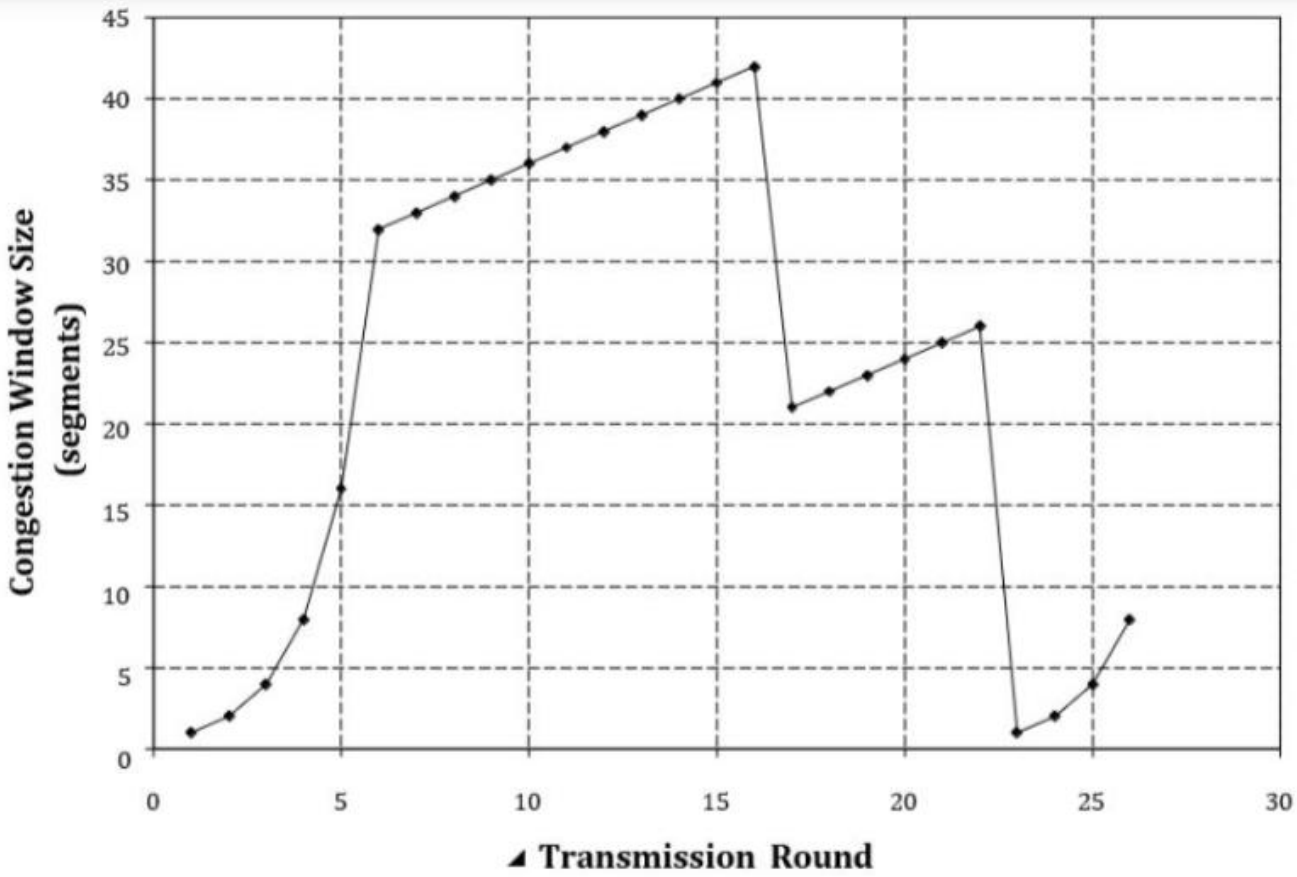

Congestion Control

1. What is the Threshold of the 1st round [respect to x-axis]?
2. What is the Threshold of the 17th round [respect to x-axis]?
3. What are the ranges of Congestion Avoidance (CA) in the above figure [respect to x-axis]?
4. What are the coordinates (i.e., ranges of rounds) of Slow Start in the above figure [respect to x- axis]?
5. What are the reasons of drop in the 17th and 23rd point [respect to x-axis]?

(3 points each) Consider the figure below. Assuming TCP Reno is the protocol experiencing the behavior shown above, answer the following questions. In all cases, you should provide a short discussion justifying your answer.

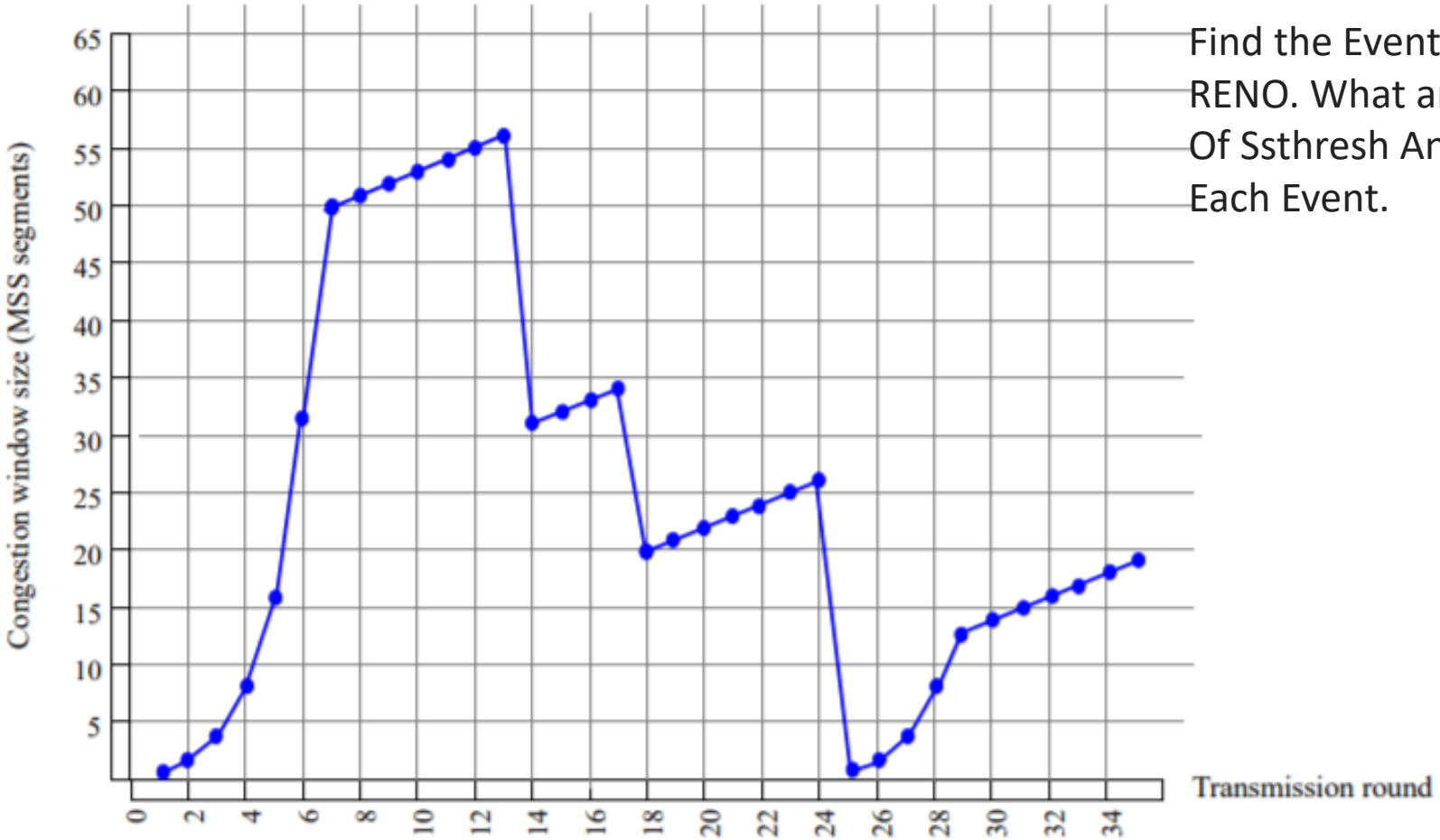

Find the Events in the TCP RENO. What are The Values Of Ssthresh And Cwnd at Each Event.

Homework

Identify Timeout/3 duplicate ACK incidence. Also identify slow start, congestion avoidance period.

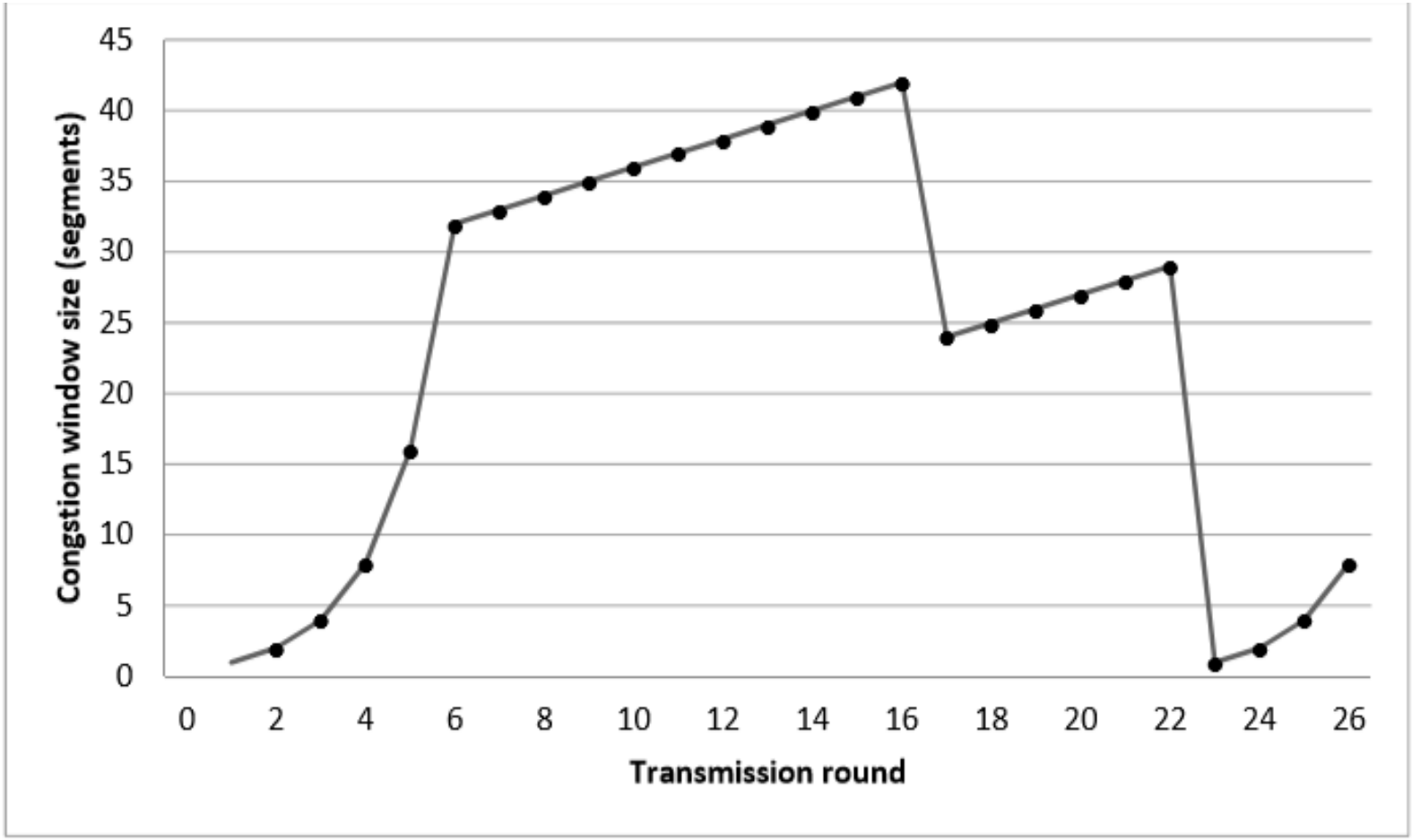

Flow control

- Send window
  - Sequence of byte numbers of which some are sent but yet to be acknowledged while others are waiting to be sent
  - Maintained by sender

- Receive window
  - Sequence of byte numbers which are expected to be received
  - Maintained by receiver

Flow control....

Send window

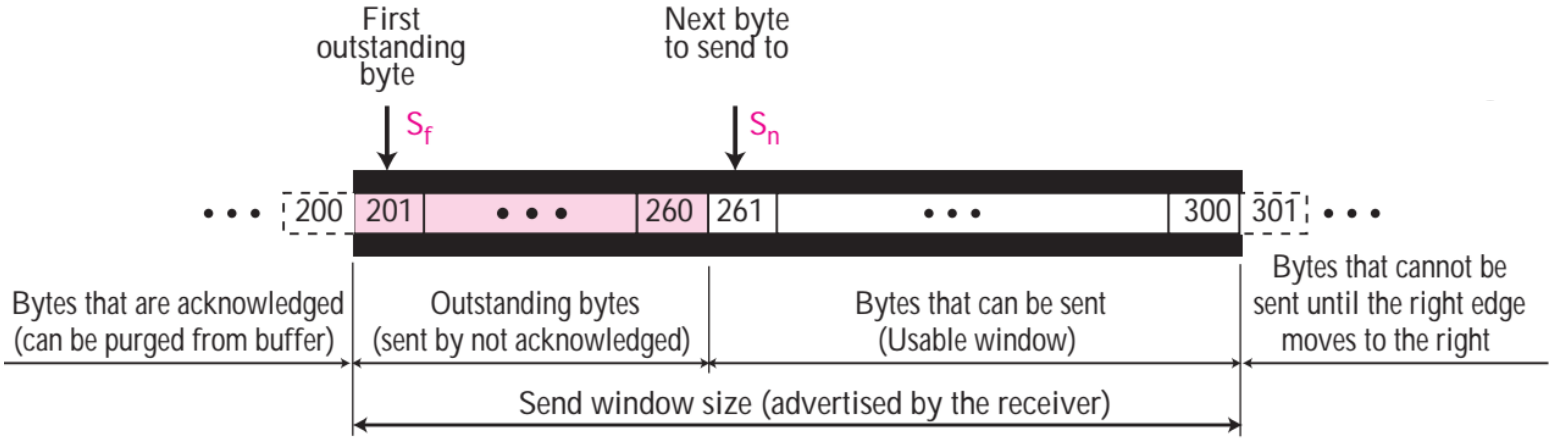

a. Send window

b. Opening and closing of send window

Flow control....

Receive window

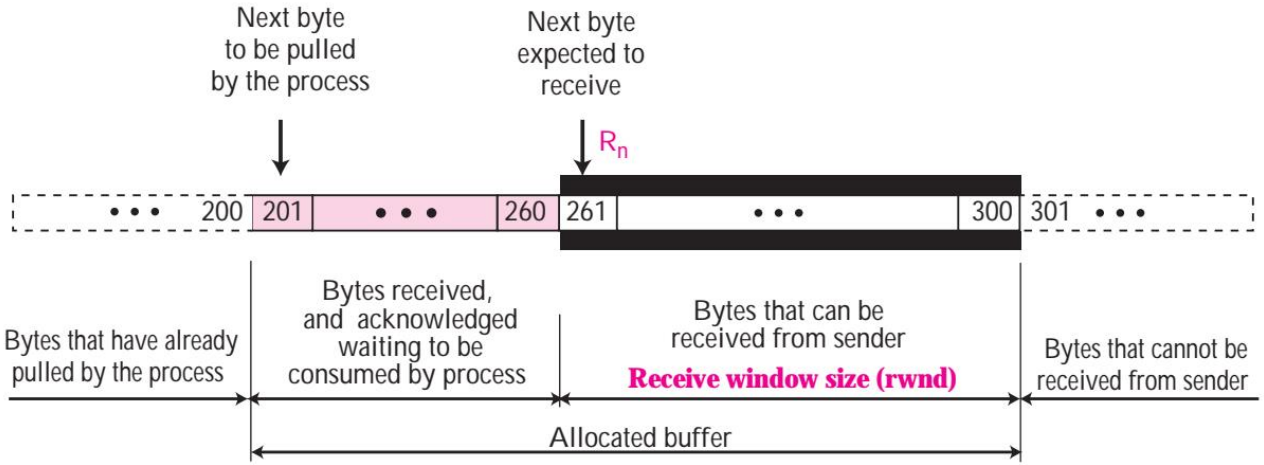

a. Receive window and allocated buffer

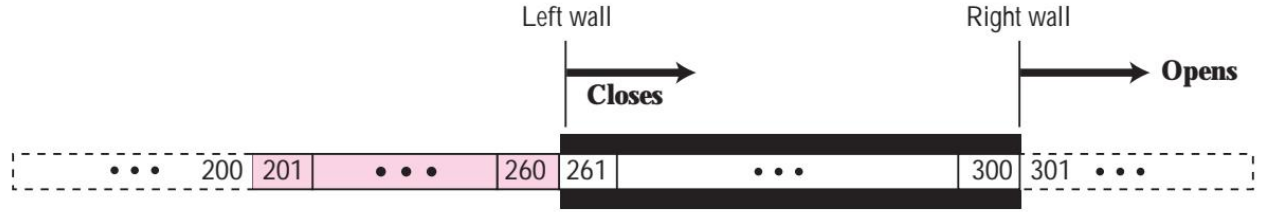

b. Opening and closing of receive window

Flow control….

1. Client sends TCP connection request with SYN 100

a) Server sets the receive window size to buffer size of 800 bytes

2. Server sends SYN+ACK to client with ACK 101, own SYN 1000, its rwnd size 800

b) Client sets its window size to 800 bytes according to the received rwnd size

3. Client sends an ACK 1001

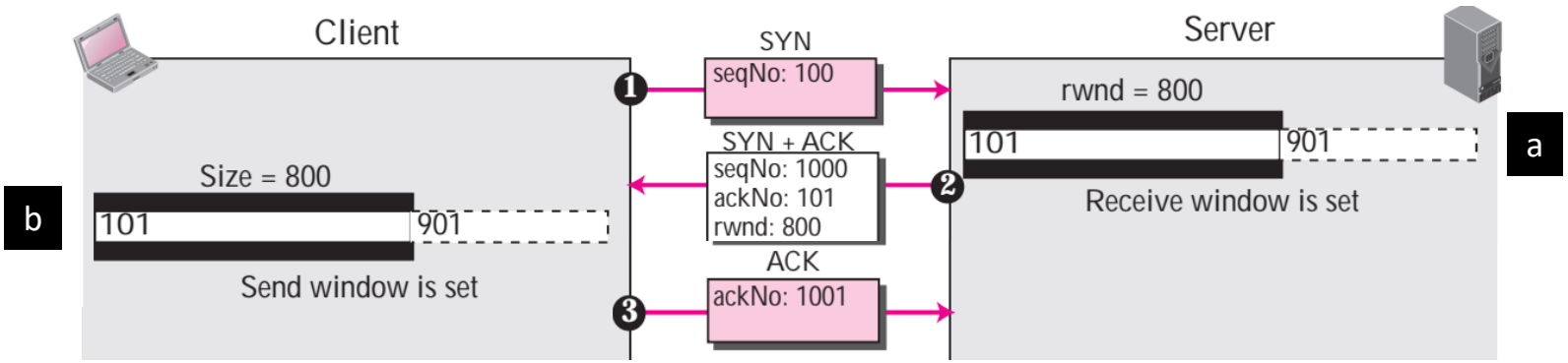

Flow control….

4. Client sends first 200 bytes (101 to 300) with Seq 101

c) Client marks 101 to 300 bytes *sent but yet to be acknowledged*.

d) Receiving 200 bytes, Server marks 101-300 bytes received and moves the left wall of rwnd to 301, thereby shrinking rwnd from 800 bytes to 600 bytes (301-900).

5. Server sends ACK 301 with its current rwnd size 600.

e) Receiving ACK 301, client removes 100-300 bytes from send window and shrinks the window between 301-900, thereby making the window of 600 bytes.

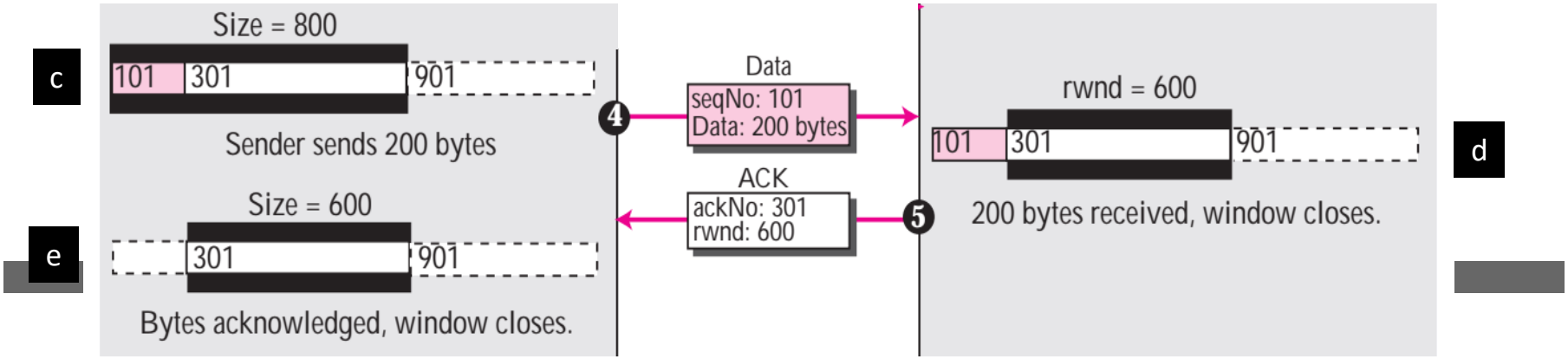

Flow control….

6. Client sends next 300 bytes from 301 to 600 with Seq 301.

f) Client marks 301-600 bytes sent but yet to be acknowledged

g) In receiver, first 100 bytes are pulled by upper layer.

Moves the right wall of rwnd by 100 byres to 1000

Receiving bytes 301-600, server marks 201-600 bytes as received.

Moves the left wall of rwnd to 601, thereby shrinking the rwnd to 400 bytes

7. Server sends ACK 601 with the recurrent rwnd size: 400.

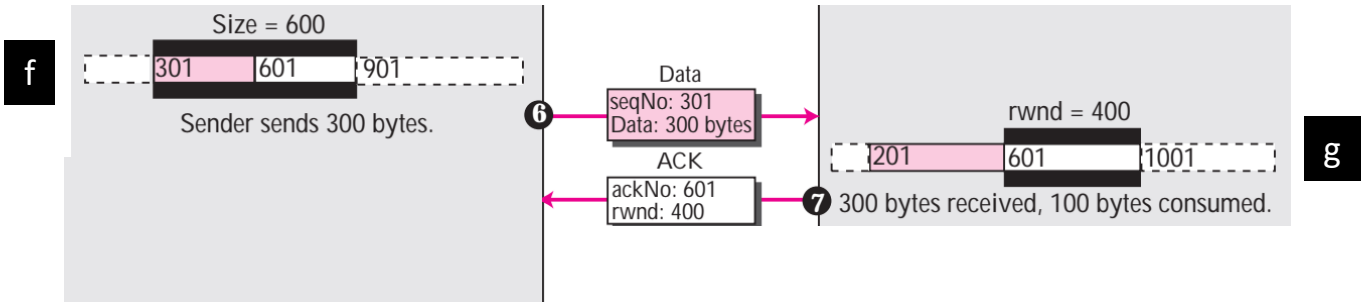

Flow control….

h) Receiving ACK 601, client removes 301-600 bytes from its window
To make window size 400, it moves left wall of window to 601 byte and right wall to 1000 byte

i) In server side, upper layer pulls 300 bytes from buffer.
Server removes 201-300 bytes from buffer.
Moves right wall of rwnd to 1200, thereby making the rwnd size 600 bytes.

8) Server sends the latest rwnd size to sender.

j) Sender moves the right wall of its window to 1200 to make the window size 600 as suggested by the server [6].

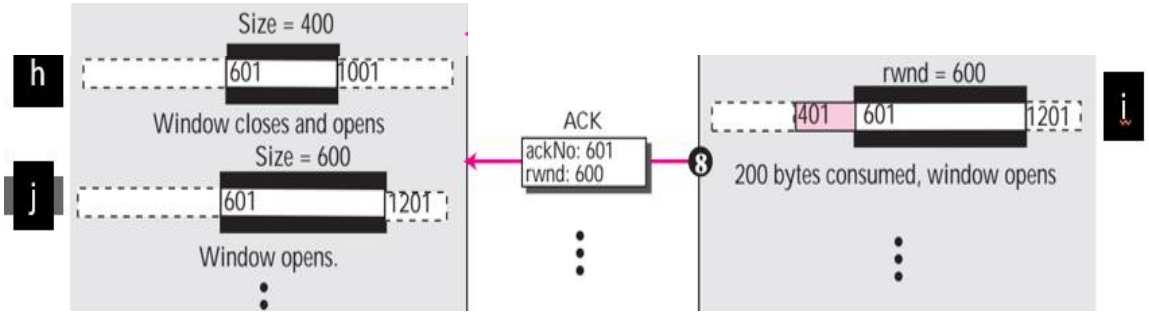

References

[1] B. A. Forouzan, *Data Communication and Networking*, *4th* ed., Tata McGraw Hill Companies, Inc., New Delhi, 2010, pp. 385.

[2] A. S. Tanenbaum and D. J. Wetherall, *Computer Networks*, 5th ed., Pearson Education India, 2013, pp. 571-572.

[3] J. F., Kurose and K. W. Ross, *Computer Networking: A Top-Down Approach*, 7th ed., Pearson Education, Inc., USA, 2017, pp. 274-277.

[4] D. Medhi and K. Ramassamy, Network Routing Algorithms, Protocols and Archtectures, 2nd ed., Elsevier Inc., 2018, pp. 607-608.

[5] D. Runemalm , D. M. Sarwar and M. Shalbaf, "Decreasing the Hybrid-ARQ bandwidth overhead through the Multiple Packet NAK (MPN) protocol", https://www.researchgate.net/publication/267554658 , [Accessed: April. 22, 2020].

[6] B. A. Forouzan, *TCP/IP Protocol Suite*, *4th* ed., McGraw Hill Companies, Inc., USA, 2010, pp. 457-462.

Recommended Books

1. **Data Communications and Networking**, *B. A. Forouzan*, McGraw-Hill, Inc., Fourth Edition, 2007, USA.
2. **Computer Networking: A Top-Down Approach**, *J. F., Kurose, K. W. Ross*, Pearson Education, Inc., Sixth Edition, USA.
3. **Official Cert Guide CCNA 200-301 , vol. 1**, *W. Odom*, Cisco Press, First Edition, 2019, USA.
4. **CCNA Routing and Switching**, *T. Lammle*, John Wily & Sons, Second Edition, 2016, USA.
5. **TCP/IP Protocol Suite**, *B. A. Forouzan*, McGraw-Hill, Inc., Fourth Edition, 2009, USA.
6. **Data and Computer Communication**, *W. Stallings*, Pearson Education, Inc., Tenth Education, 2013, USA.